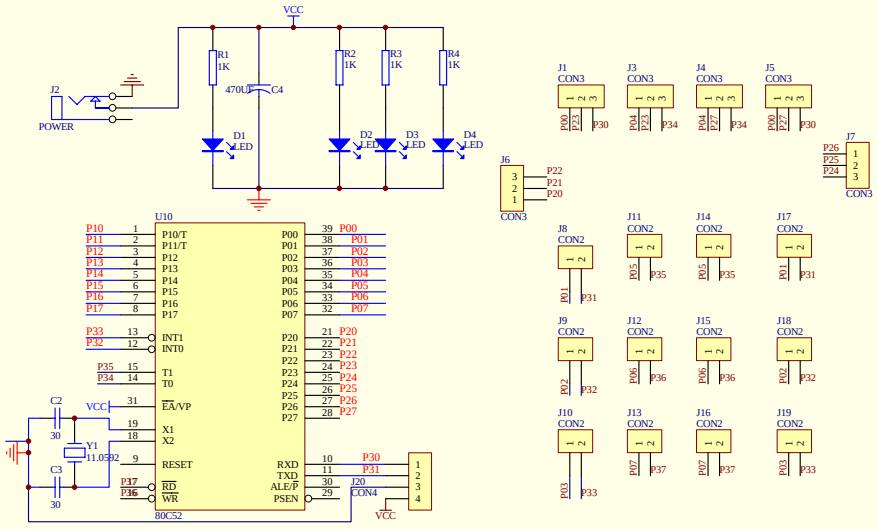

Title		
Size B	Number	Revision
Date: 4-Jul-2014	Sheet of	
File: D:\毕业设计\444光立方资料\4X4X4光立方资料\Protel原理图\8x8x8.ddb		